Datasheet

GPO(SMP) Male Bulkhead Mount Connector for PCB | DC - 26.5GHz | Limited Detent

GPO-JYD26AG-L

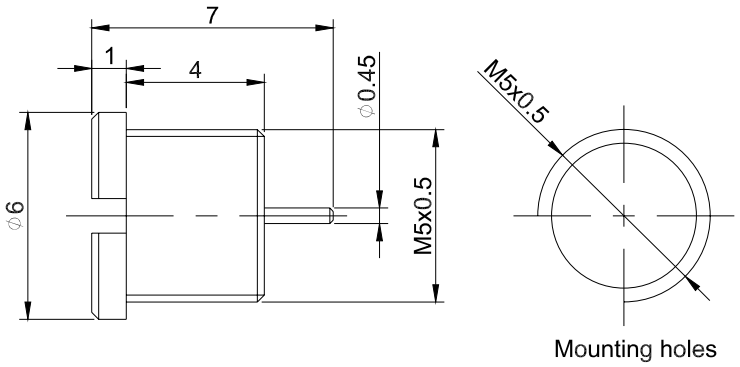

Dimensions are in mm



Product Configuration

Connector Series	GPO(SMP)
Connector Polarity	Standard
Connector Gender	Male
Body Style	Straight
Termination Type	PCB
Connector Impedance (Ohm)	50
Mount Method	Bulkhead

Mechanical Data

Min. Mating Cycles	≥500
Body Material	Stainless Steel
Body Plating	Passivated

Electrical Specifications

Frequency	DC - 26.5GHz
VSWR / Return Loss	1.4
Insertion Loss	≤ 0.1 x Sqrt.(f_GHz)

Enviromental Specifications

RoHS Compliant	Yes
Operating Temperature Range	-55 ºC to +165ºC

Gwave Technology Inc

(888)251-2240

87 Patricia Ct, Mountain View, CA 94041

sales@gwavetech.com

www.gwavetech.com