Isolator with 16dB Isolation from 2GHz to 6GHz | 20 Watts with N Female

P/N: GIS020060-NF

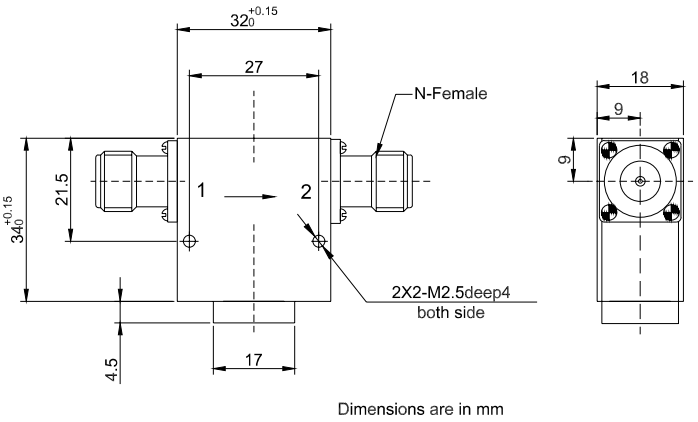

Dimensions are in mm



Product Configuration

Connector-In Series	N
Connector-In Polarity	Standard
Connector-In Gender	Female
Connector-In Impedance (Ohm)	50
Connector-Out Series	N
Connector-Out Polarity	Standard
Connector-Out Gender	Female
Connector-Out Impedance (Ohm)	50

Mechanical Data

Weight (g)	120
Body Material	Aluminum
Body Plating	Oxidation
Connector In Body Material	Brass
Connector In Body Plating	Nickel
Connector Out Body Material	Brass
Connector Out Body Plating	Nickel
External body material	Nickel plated iron

Isolator with 16dB Isolation from 2GHz to 6GHz | 20 Watts with N Female

P/N: GIS020060-NF

Electrical Specifications

VSWR / Return Loss	≤1.40
Insertion Loss	≤ 0.7dB
Power, Max Input (Watts)	20
Frequency Range	2GHz~6GHz
Isolation Min.(dB)	16

Enviromental Specifications

RoHS Compliant	Yes
Operating Temperature Range	0°C to +60 ºC
Storage Temperature Range	-40 ºC to +85 ºC

Test Data

