Flexi RF
Reliable RF Components In Stock

Datasheet

30 KHz to 18 GHz SMA Bias Tee Rated to 500 mA And 50 Volts DC

P/N: GBT-30K18G-SMA

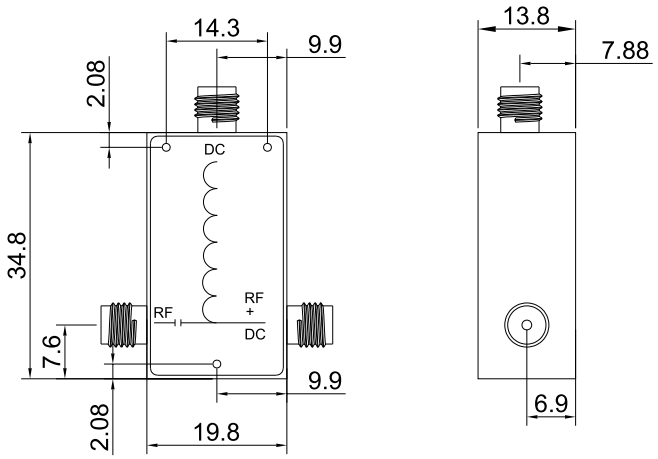

Dimensions are in mm





Product Configuration

DC Port Connector Series	SMA Female
Connector-In Series	SMA
Connector-In Polarity	Standard
Connector-In Gender	Female
Connector-In Impedance (Ohm)	50
Connector-Out Series	SMA
Connector-Out Polarity	Standard
Connector-Out Gender	Female
Connector-Out Impedance (Ohm)	50

Electrical Specifications

Frequency Range	30KHz to 18GHz
VSWR / Return Loss	<1.5
Power, Max Input (Watts)	5
Voltage, DC Max (Volts)	+50
Current, Max (mA)	500
RF to Bias Isolation, Max (dB)	38

Flexi RF Inc
(650)880-9199
20195 Stevens Creek Blvd, Suite 220, Cupertino, CA 95014
sales@flexirf.com
www.flexirf.com

30 KHz to 18 GHz SMA Bias Tee Rated to 500 mA And 50 Volts DC P/N: GBT-30K18G-SMA

Mechanical Data

Min. Mating Cycles	≥500

Enviromental Specifications

RoHS Compliant	Yes
Operating Temperature Range	-40□ to +85□