G3PO(SMPS) Female Straight Connector Pull-Out Tool

P/N: G3PO-T002

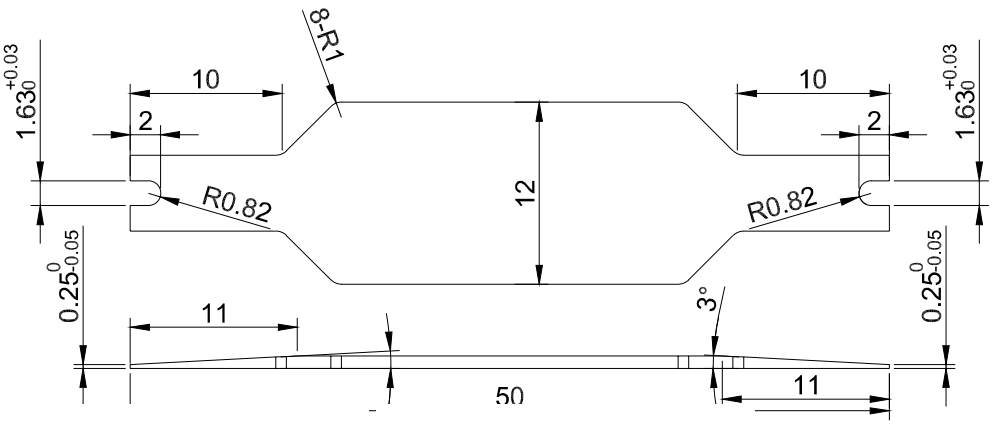

Product Configuration

Connector Series	G3PO(SMPS)

Mechanical Data

Body Material	Stainless Steel
Body Plating	Passivated

Enviromental Specifications

RoHS Compliant	Yes