Datasheet

G3PO (SMPS) Male Connector Solder Attachment Surface Mount PCB | DC - 100GHz

G3PO-JHD10-1

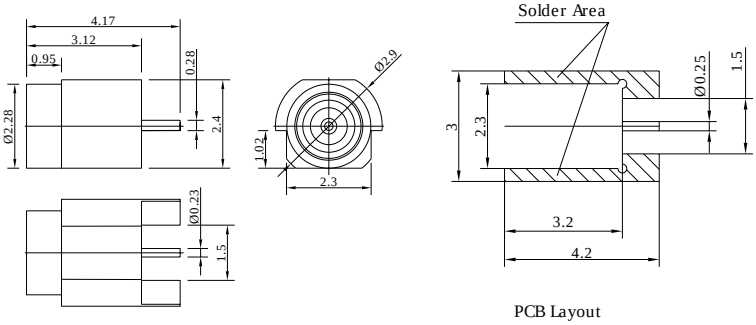

PCB Layout

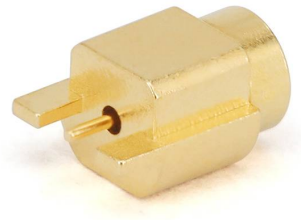

Dimensions are in mm

Product Configuration

Connector Series	G3PO(SMPS)
Connector Polarity	Standard
Connector Gender	Male
Body Style	Straight
Termination Type	PCB
Connector Impedance (Ohm)	50
Mount Method	None

Mechanical Data

Min. Mating Cycles	≥500
Body Material	Brass
Body Plating	Gold

Electrical Specifications

Frequency	DC - 100GHz
VSWR / Return Loss	1.7
Insertion Loss	≤ 0.1 x Sqrt.(f_GHz)

Enviromental Specifications

RoHS Compliant	Yes
Operating Temperature Range	-40 to +165

Gwave Technology (Changzhou) Co., Ltd.

www.gwave.cn
www.mwstore.com
sales@gwave.cn
sales@mwstore.com
Bldg10, 198 Yunhe Road, Zhonglou District
Changzhou, Jiangsu, China 213002
0519-85102200