Datasheet

BMA Female to SMA Female Bulkhead Straight Precision Adapter | DC to 18GHz

P/N: BMA/SMA-KYKS

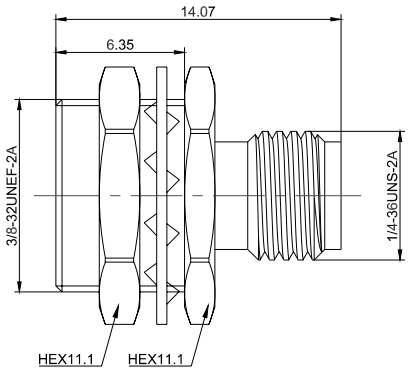



Dimensions are in mm

Product Configuration

	Connector 1	Connector 2
Connector Series	BMA	SMA
Connector Polarity	Standard	Standard
Connector Gender	Female	Female
Connector Impedance (Ohm)	50	50
Connector Body Material	Stainless Steel	Stainless Steel
Connector Body Plating	Passivated	Passivated
Body Style	Straight	Straight
Mount Method	Bulkhead	Bulkhead

Electrical Specifications

Frequency	DC - 18GHz
VSWR / Return Loss	1.15 to 18GHz
Insertion Loss	≤ 0.1 x Sqrt.(f_GHz)

Mechanical Data

Min. Mating Cycles	≥500

Enviromental Specifications

RoHS Compliant	Yes
Operating Temperature Range	-55 ºC to +165ºC
MIL/STD	N/A

Gwave Technology Inc

(888)251-2240

87 Patricia Ct, Mountain View, CA 94041

sales@gwavetech.com

www.gwavetech.com