Flexi RF
Reliable RF Components In Stock

Datasheet

2.92mm Female Connector with 2 Hole Flange | Through-plate Metal Diameter 4mm and Length 3mm | DC - 40GHz

P/N: FR2-2.92-KFD0402

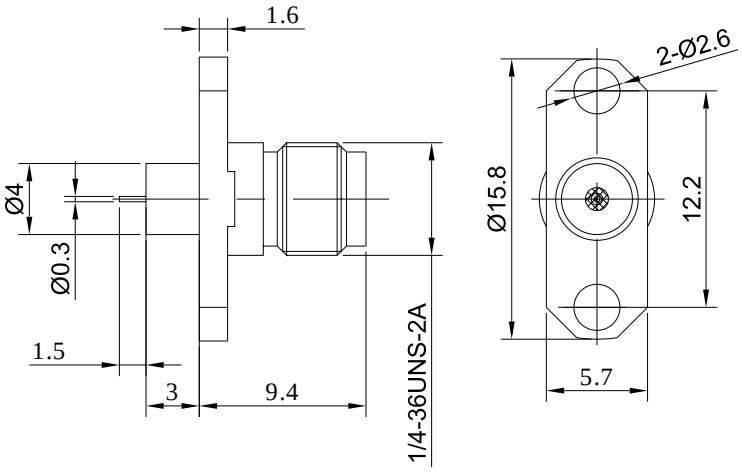

Dimensions are in mm

Product Configuration

Body Style	Straight
Connector Series	2.92mm
Connector Polarity	Standard
Connector Gender	Female
Termination Type	Terminal
Connector Impedance (Ohm)	50
Mount Method	2 Hole Flange

Electrical Specifications

Frequency	DC - 40GHz
VSWR / Return Loss	1.15
Insertion Loss	≤ 0.05 x Sqrt.(f_GHz)

Mechanical Data

Min. Mating Cycles	≥500
Weight	2.22 g
Body Material	Stainless Steel
Body Plating	Passivated

Enviromental Specifications

RoHS Compliant	Yes
Operating Temperature Range	-55 ºC to +165 ºC
MIL/STD	N/A

Flexi RF Inc
(650)880-9199
20045 Stevens Creek Blvd., Suite 2B, Cupertino, CA 95014
sales@flexirf.com
www.flexirf.com